Test: Primary 5 Maths (Term 4) - St Nicholas (2020)

Points: 48 points

Name: _____ **Score:** _____

Date: _____

Signature: _____

Select multiple choice answers with a cross or tick:

- ○ Only select one answer
- ☐ Can select multiple answers

Question 1 of 54

Primary 5 Maths (Term 4) 1 pt

206 081 is 10 000 more than _____

- ○ **A)** 216 081
- ○ **B)** 205 081
- ○ **C)** 196 081
- ○ **D)** 106 081

Question 2 of 54

Primary 5 Maths (Term 4) 1 pt

Which one of the following numbers is more than $\frac{1}{2}$?

- ○ **A)** $\frac{2}{7}$
- ○ **B)** $\frac{3}{8}$
- ○ **C)** $\frac{5}{9}$
- ○ **D)** $\frac{5}{12}$

Question 3 of 54

Primary 5 Maths (Term 4) 1 pt

Express $4\frac{8}{20}$ as a decimal.

- A) 4.04
- B) 4.08
- C) 4.32
- D) 4.40

Question 4 of 54

Primary 5 Maths (Term 4) 1 pt

In the number line below, what is the value of the missing number?

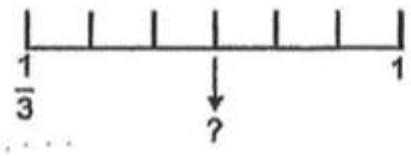

- A) $\frac{1}{2}$
- B) $\frac{7}{12}$
- C) $\frac{2}{3}$
- D) $\frac{5}{6}$

Question 5 of 54

Primary 5 Maths (Term 4) 1 pt

There are 300 vehicles at a car park. 60% of the vehicles are lorries. How many lorries are there at the car park?

- **A)** 120
- **B)** 180
- **C)** 200
- **D)** 240

Question 6 of 54

Primary 5 Maths (Term 4) 1 pt

Which one of the following ratios is in the simplest form?

- **A)** 9:56
- **B)** 8:42
- **C)** 7:28
- **D)** 6:27

Question 7 of 54

Primary 5 Maths (Term 4) 1 pt

A tank was completely filled with water at 09 00. Water was drained out of the tank from 09 00 to 13 00. The line graph shows the volume of water left in the tank from 09 00 to 13 00.

Use the graph below to answer questions 7 and 8.

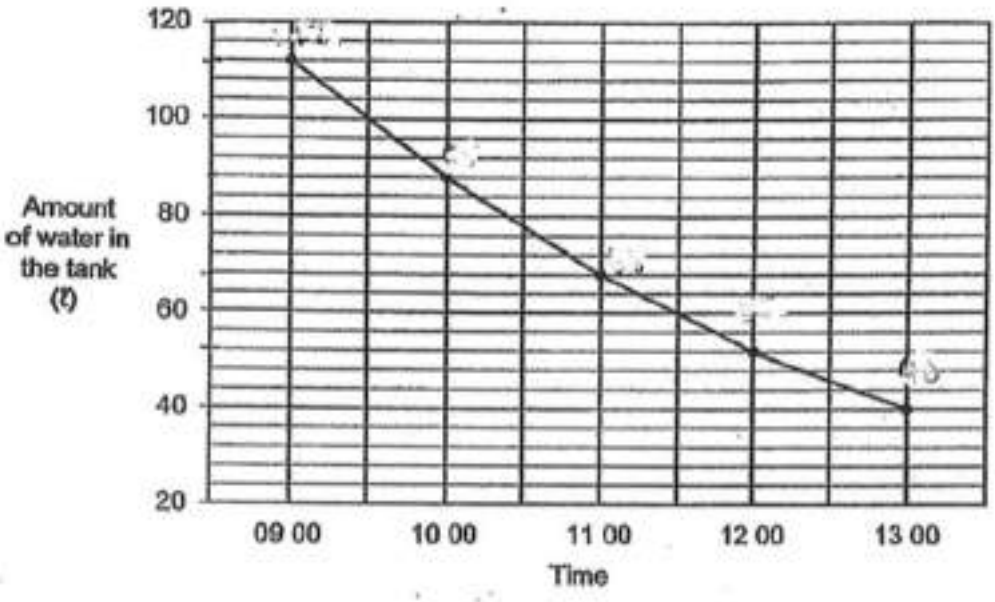

What is the capacity of the tank?

- A) 40
- B) 72
- C) 112
- D) 120

Question 8 of 54

Primary 5 Maths (Term 4) 1 pt

In which of the following periods was 12 litres of water being drained out of the tank?

- A) From 09 00 to 10 00
- B) From 10 00 to 11 00
- C) From 11 00 to 12 00
- D) From 12 00 to 13 00

Question 9 of 54

Primary 5 Maths (Term 4) 1 pt

Express 60 050g in kg.

- A) 6.005kg
- B) 60.05kg
- C) 60.5kg
- D) 600.5kg

Question 10 of 54

Primary 5 Maths (Term 4) 1 pt

The figure below shows a road map.

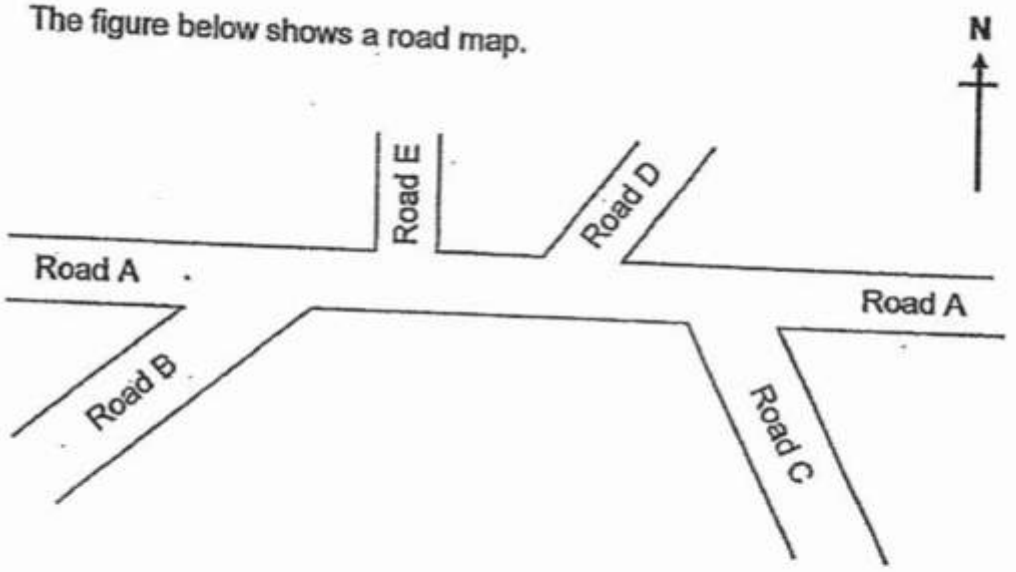

A taxi moved along Road A. After the taxi turned into another road, it faced north-east. Which road did it turn into?

- A) B
- B) C
- C) D
- D) E

Question 11 of 54

Primary 5 Maths (Term 4) 1 pt

Ting had 40 fifty-cent coins and 30 twenty-cent coins. She exchanged all her coins for some two-dollar notes. How many two-dollar notes did she exchange all her coins for?

- A) 13
- B) 26
- C) 35
- D) 52

Question 12 of 54

Primary 5 Maths (Term 4) 1 pt

Matt had 80 game cards and Oscar had 60 game cards. Oscar gave 10% of his game cards to his cousin. What was the total number of game cards Matt and Oscar had in the end?

- **A)** 86
- **B)** 126
- **C)** 132
- **D)** 134

Question 13 of 54

Primary 5 Maths (Term 4) 1 pt

The table below shows the postage rates of mail in a city.

Mass step up to	Postage rates of mail
100 g	$0.70
250 g	$1.00
500 g	$1.25
1 kg	$2.65
2 kg	$3.45

Hebe sent 2 mails of mass 100 g and 1200 g to different places. How much did she pay altogether?

- **A)** $4.75
- **B)** $4.15
- **C)** $3.45
- **D)** $3.35

Question 14 of 54

Primary 5 Maths (Term 4) 1 pt

Kai and Dinny folded paper stars over two days. On Friday, Kai folded 21 more paper stars than Dinny. On Saturday, Dinny folded another 39 paper stars. At the end of the two days, Kai folded $\frac{3}{7}$ of the total number of paper stars. How many paper stars did Kai fold?

- A) 126
- B) 72
- C) 54
- D) 18

Question 15 of 54

Primary 5 Maths (Term 4) 1 pt

A piece of ribbon, 270 cm long, is made up of white, grey and black segments as shown below. Each segment is 6 cm long. The segments follow a repeated pattern. How many white segments are there?

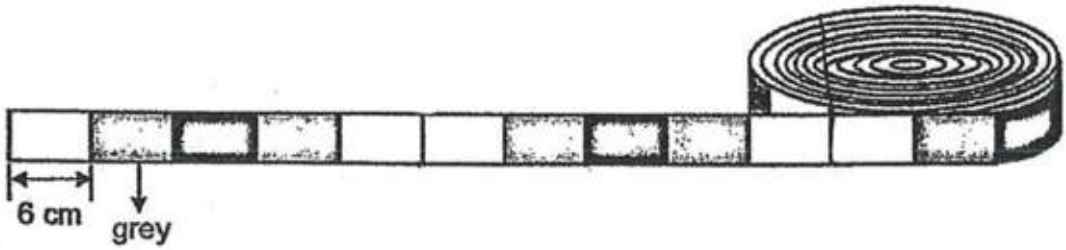

- A) 18
- B) 27
- C) 90
- D) 108

Question 16 of 54

Primary 5 Maths (Term 4) 1 pt

In 2.516 which digit is in the thousandths place?

Question 17 of 54

Primary 5 Maths (Term 4) 1 pt

Find the value of 160÷4x5+(19-3)

Question 18 of 54

Primary 5 Maths (Term 4) 1 pt

A piece of cloth was cut into 20 equal pieces. Each piece was $\frac{3}{4}$ m.

What was the total length of the 20 pieces of cloth?

Question 19 of 54

Primary 5 Maths (Term 4) 1 pt

A book costs $56 before a 7% GST. How much is the GST?

Question 20 of 54

Primary 5 Maths (Term 4) 1 pt

Mrs Aiken paid $330 to carpet a room with an area of 30m2. What was the cost of carpeting the room per swore metre?

Question 21 of 54

Primary 5 Maths (Term 4) 1 pt

Match the options below from the largest to the smallest:

1. [ ]	1.9	A.	smallest
2. [ ]	$\frac{9}{5}$	B.	largest
3. [ ]	$1\frac{1}{4}$	C.	large
4. [ ]	$\frac{11}{10}$	D.	small

Question 22 of 54

Primary 5 Maths (Term 4) 1 pt

The figure below shows a rectangular glass box partly filled with 1-cm cubes. When the box is completely filled with the 1-cm cubes, what is the volume of the box?

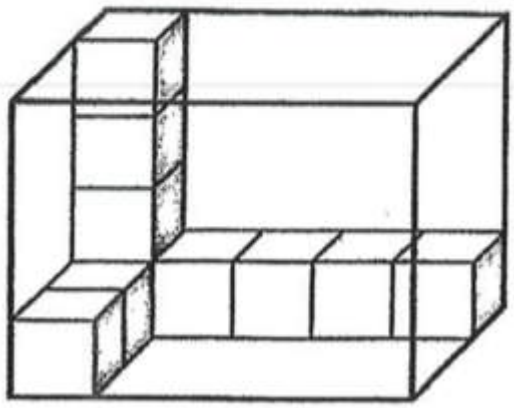

Question 23 of 54

Primary 5 Maths (Term 4) 1 pt

In the figure below, AB, CD and EF are straight lines. Find $\angle r$.

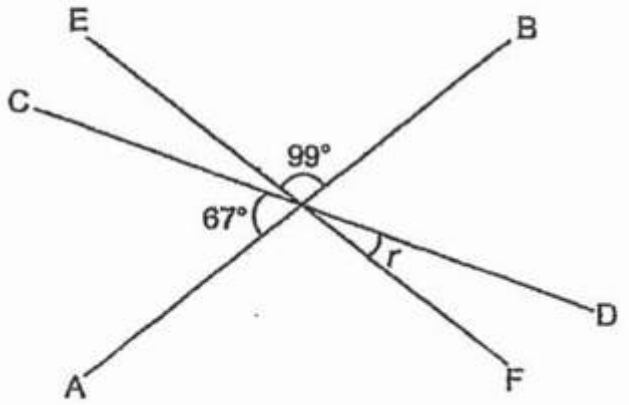

Question 24 of 54

Primary 5 Maths (Term 4) 0 pts

The figure below is made up of squares. Shade four more squares to form a symmetric figure with AB as the line of symmetry.

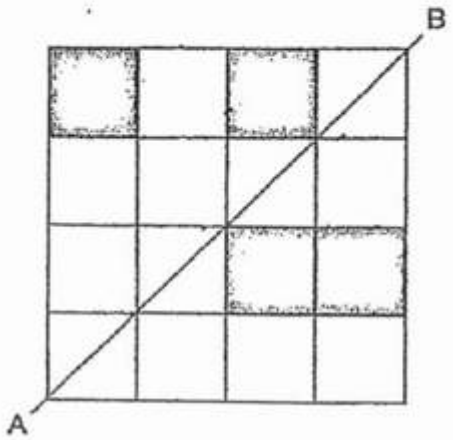

Question 25 of 54

Primary 5 Maths (Term 4) 1 pt

The figure below shows three similar paper clips being chained together. What is the total length of the figure?

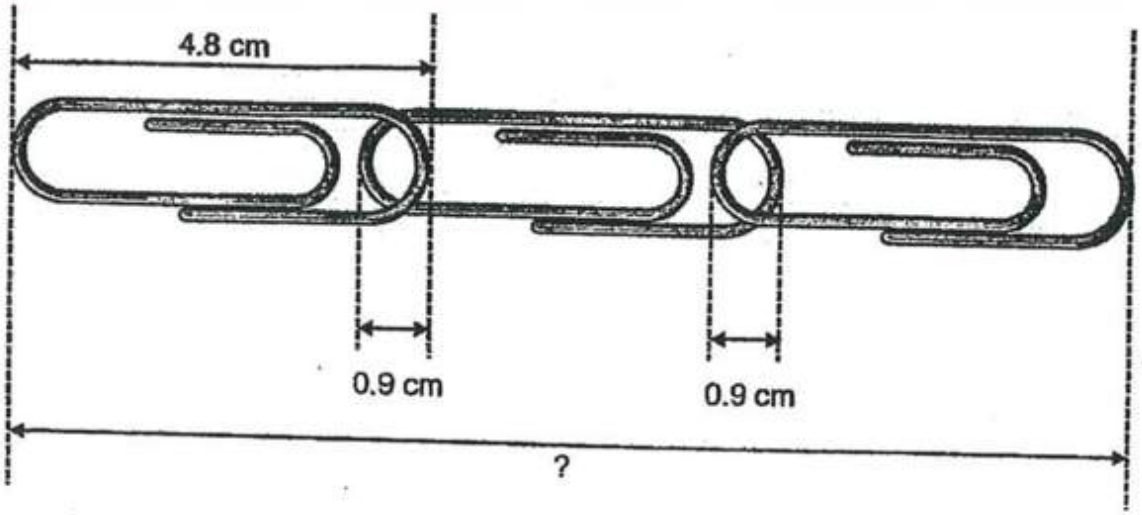

Question 26 of 54

Primary 5 Maths (Term 4) 1 pt

A tank is $\frac{1}{2}$ filled with water. When 1536 ml of water is poured out, the tank becomes $\frac{1}{8}$ filled. How much water is there in the tank when it is $\frac{1}{2}$ filled?

Question 27 of 54

Primary 5 Maths (Term 4) 1 pt

The bar graph below shows the number of customers at a supermarket from Tuesday to Thursday. The total number of customers on Thursday and Friday was equal to the average number of customers on Tuesday and Wednesday. How many customers were at the supermarket on Friday? Draw the bar in the graph.

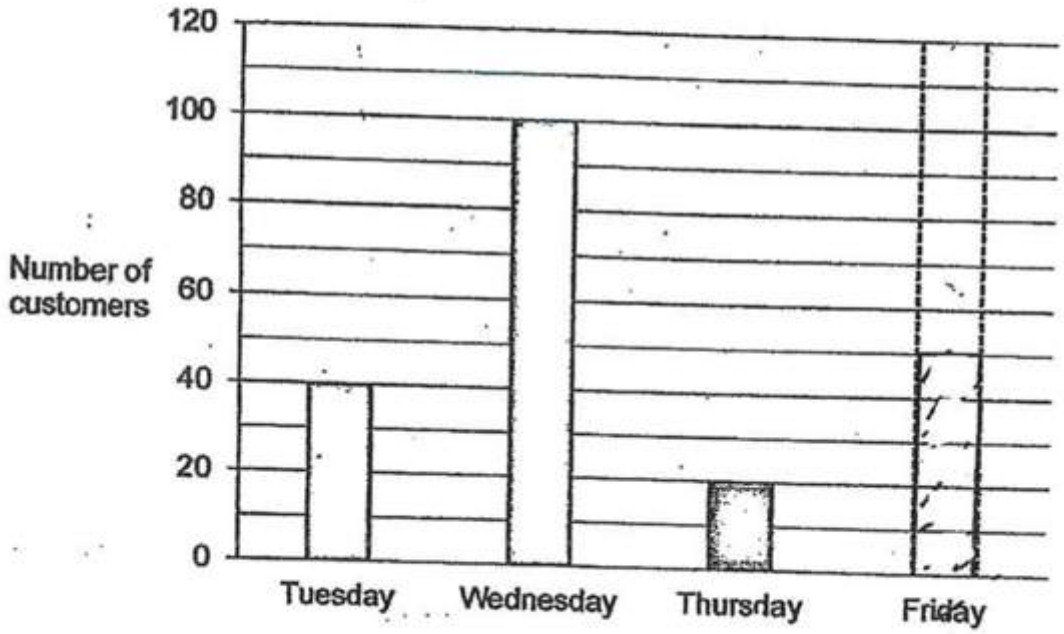

Question 28 of 54

Primary 5 Maths (Term 4) 1 pt

In the figure below, Rectangle X overlaps Rectangle Y. The ratio of the area of Rectangle X to the area of the shaded part to the area of Rectangle Y is 8 : 3 : 12. The area of Rectangle X is 120 cm². What is the area of the unshaded part in Rectangle Y?

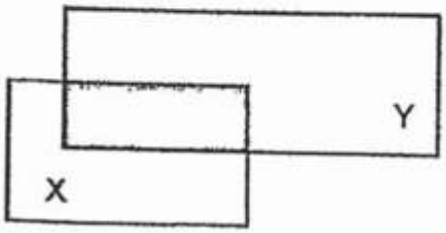

Question 29 of 54

Primary 5 Maths (Term 4) 1 pt

The figure below shows a square with 4 identical right-angled triangles along the line CD. What fraction of the figure is the shaded part? Leave your answer in the simplest form.

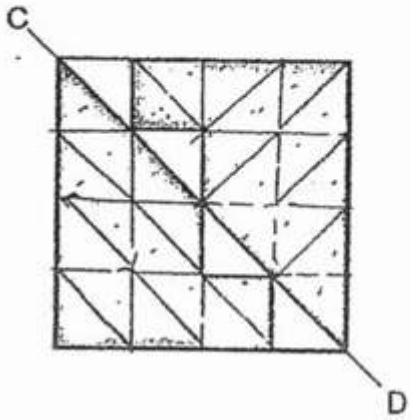

Question 30 of 54

Primary 5 Maths (Term 4) 1 pt

Elix wrote a whole number and listed all the factors. The number that she had written has exactly six factors. Two of the factors are 3 and 9.

The smallest possible number that Elix had written was 18

- A) True
- B) False
- C) Not possible to tell

Question 31 of 54

Primary 5 Maths (Term 4) 1 pt

The sum of all the factors of the number written by Elix is 30

- A) True
- B) False
- C) Not possible to tell

Question 32 of 54

Primary 5 Maths (Term 4) 1 pt

Jee Bin baked fruit cakes and cheese cakes. $\frac{4}{11}$ of the cakes were fruit cakes. 308 of them were cheese cakes. How many cakes did he bake altogether?

Question 33 of 54

Primary 5 Maths (Term 4) 1 pt

There were some cones and 106 hula hoops in a PE storeroom. 22 cones were damaged and thrown away. Then the ratio of the number of the hula hoops to the number off cones was 2:1. How many cones were there in the storeroom at first?

Question 34 of 54

Primary 5 Maths (Term 4) 1 pt

A cuboid of height 19 cm has a square base of side 6 cm. What is its volume?

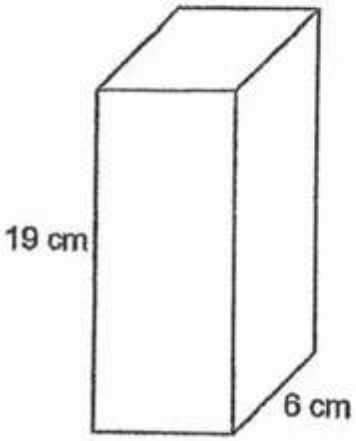

Question 35 of 54

Primary 5 Maths (Term 4) 1 pt

The figure below shows a triangle ABC. ∠ABC = 282°. Find the sum of ∠BAC and ∠BCA.

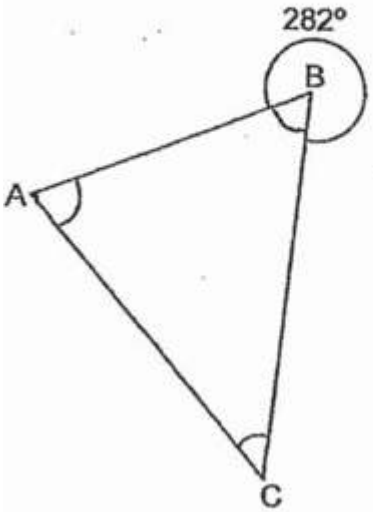

Question 36 of 54

Primary 5 Maths (Term 4) 1 pt

At first, the average amount of water in two pails A and B was 471cm3. Some water was poured into B. Then the average amount of water in A and B became 976cm3. How much water was poured into B?

Question 37 of 54

Primary 5 Maths (Term 4) 1 pt

The mass of a stapler is $\frac{1}{6}$ of the total mass of 1 such stapler and 10 identical erasers. The total mass of 3 such staplers and 20 such erasers is 1560 g. What is the mass of 1 such stapler?

Question 38 of 54

Primary 5 Maths (Term 4) 1 pt

Shop X and Shop Y sold the same type of mugs shown below. Mrs Ota planned to buy 32 such mugs from Shop X. She changed her mind and bought the same type of mugs at a lower price from Shop Y. She saved $40 on the same number of mugs. How much did she pay for each mug?

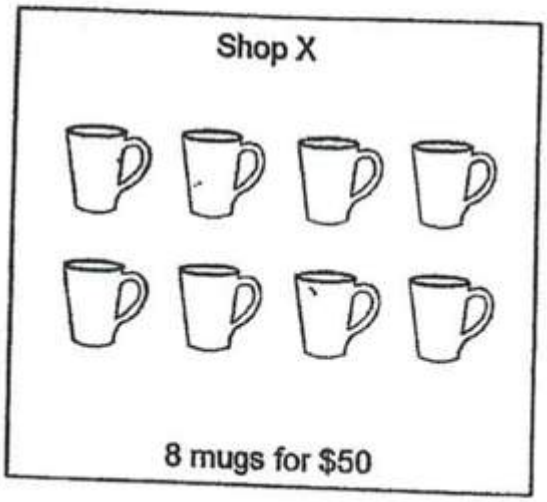

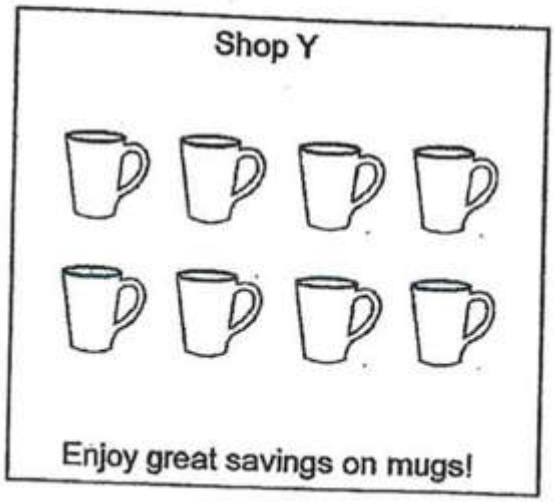

Question 39 of 54

Primary 5 Maths (Term 4) 1 pt

The table below shows the price of tickets to watch a puppet show. The weekday price and the weekend price of a child's ticket is smudged with ink. A child's ticket costs $7.80 less on a weekday than on a weekend.

	Adults	Senior Citizens (65 years and above)	Children (3 years old to 12 years old)
Weekdays	$11.50 each	$8.50 each	each
Weekends	$24.00 each	$18.00 each	

$14.60

Last Saturday, Mrs Pong went to watch the puppet show with her 70-year-old father and her 8-year-old daughter. She paid a total amount of $56.60 for the tickets.
If the family were to watch the show on a Thursday, how much would Mrs Pong pay for her daughter's ticket?

Question 40 of 54

Primary 5 Maths (Term 4) 1 pt

At Shinee Sparkle Store, the usual price of a necklace was $1290. During a sale, Laurice bought the necklace at a discount of 38%. As Laurice was a member of the store, she was given an additional $15 discount off the price of the necklace after the 38% discount. How much did Laurice pay for the necklace in the end?

Question 41 of 54

Primary 5 Maths (Term 4) 1 pt

In the figure below, ABCD is a rectangle and ABE is a right-angled triangle with sides measuring 27 cm, 36 cm and 45 cm. The perimeter of the shaded part is 3.08 m. What is the area of the shaded part?

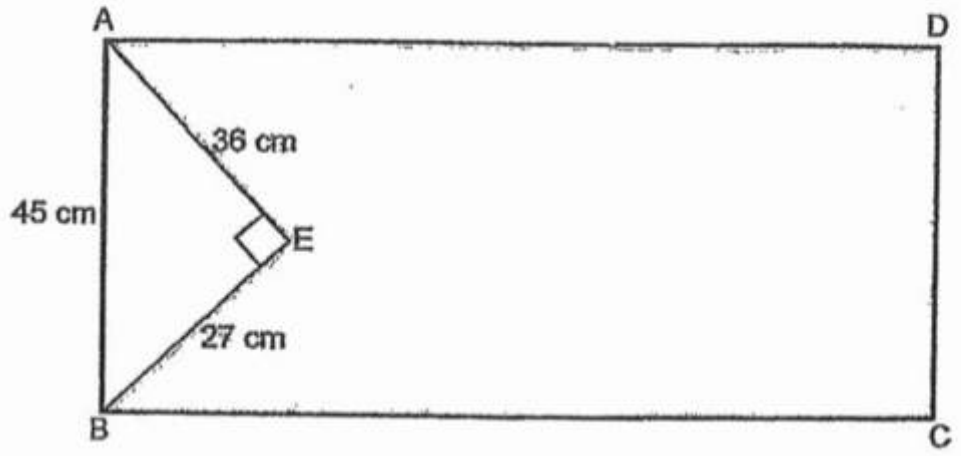

Question 42 of 54

Primary 5 Maths (Term 4) 0 pts

In the grid below, JK is one side of an isosceles triangle.

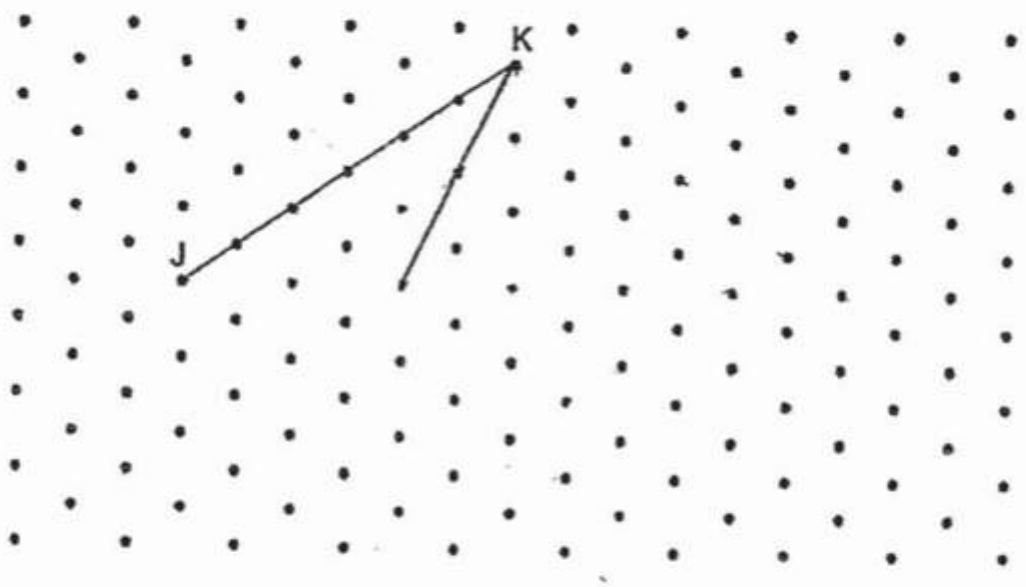

(a) Draw and complete triangle JKL from the given line JK.
Label the triangle JKL. [2]

Question 43 of 54

Primary 5 Maths (Term 4) 0 pts

b) From K, draw a line to divide triangle JKL, into two triangles of a different area

Question 44 of 54

Primary 5 Maths (Term 4) 0 pts

A group of women and men took part in a quiz that consisted of two rounds.

$\frac{3}{5}$ of the women and $\frac{2}{3}$ of the men were not selected for the 2nd round.

A total of 900 women and men were not selected for the 2nd round.

The number of women who were not selected was the same as the number of men who were not selected.

(a) Were there more women or more men who were selected for the 2nd round?

- A) Women
- B) Men

Question 45 of 54

Primary 5 Maths (Term 4) 0 pts

b) Find the total number of women and men who took part in the quiz

Question 46 of 54

Primary 5 Maths (Term 4) 0 pts

Spencer, Nigel and Greta shared the cost of a massage chair for their mother.

Spencer paid $\frac{2}{9}$ of the total cost of the massage chair. Nigel paid $\frac{5}{8}$ of what Spencer paid. Altogether, Spencer and Nigel paid $793. How much did Greta pay for the massage chair?

Question 47 of 54

Primary 5 Maths (Term 4) 1 pt

The bar graph below shows the number of reusable masks donated by five Primary 5 classes to a children's home. Every pupil in each class donated either 2 masks or 3 masks.

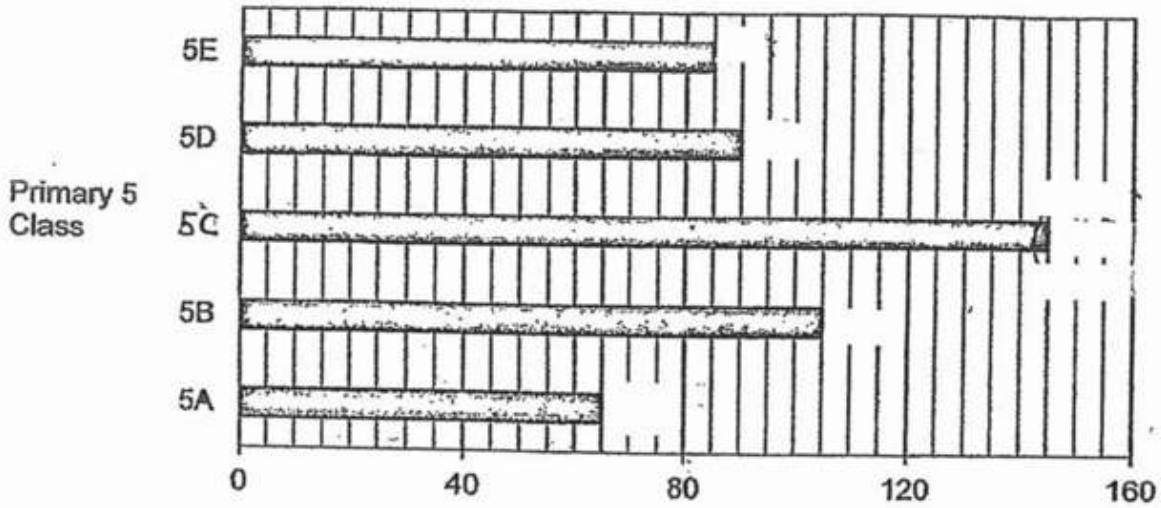

(a) Which class donated the number of masks that was closest to the average number of masks donated by all the five classes?

- A) 5A
- B) 5B
- C) 5C
- D) 5D
- E) 5E

Question 48 of 54

Primary 5 Maths (Term 4) 1 pt

b) There are 38 pupils in primary 5E. Some of them donated 3 masks each. How many pupils donated 3 masks each?

Question 49 of 54

Primary 5 Maths (Term 4) 1 pt

A cubical tank, Tank X of edge 17 cm was filled with water up to a height of 3 cm. A rectangular tank, Tank Y measuring 41 cm by 36 cm by 27 cm, was also filled with some water. The water level in Tank Y was the same as the height of Tank X.

(a) What was the volume of water in Tank X at first?

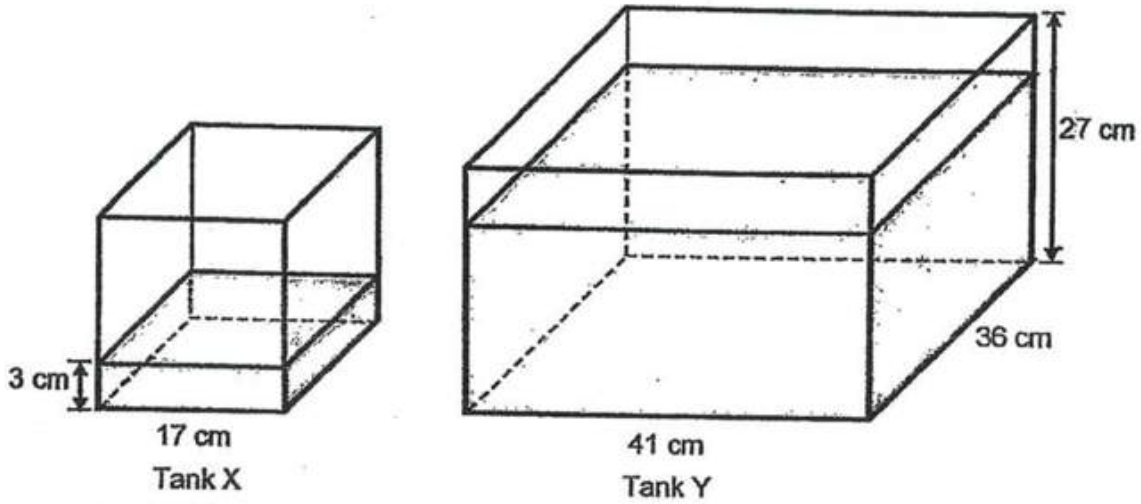

Question 50 of 54

Primary 5 Maths (Term 4) 1 pt

b) All the water from Tank X was then poured into Tank Y without any spilling. How much more water had to be poured into Tank Y two that the water level was 2cm from the top?

Question 51 of 54

Primary 5 Maths (Term 4) 1 pt

In the figure below, MNQ and QRS are two identical isosceles triangles. NM = NQ and RQ = RS. ∠QMN = 69°, ∠SQT = 57° and ∠MNT = 79°.

(a) Find ∠QPS.

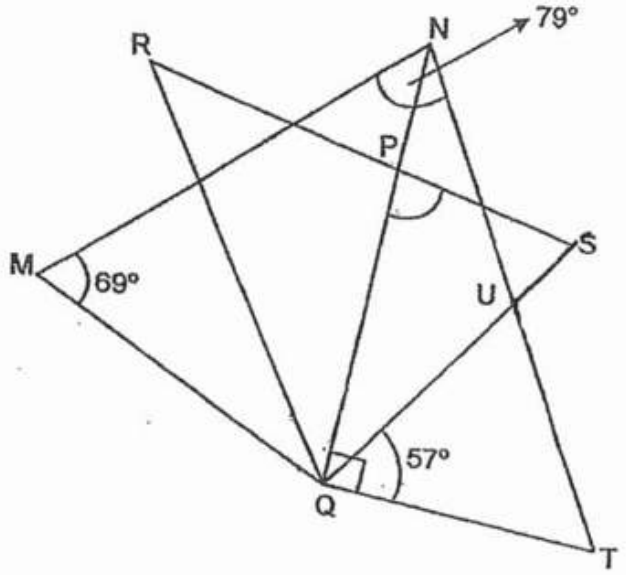

Question 52 of 54

Primary 5 Maths (Term 4) 1 pt

b) Find TUS

Question 53 of 54

Primary 5 Maths (Term 4) 1 pt

At first, there were some girls in the hall. $\frac{7}{10}$ of the girls left the hall. After some time, $\frac{1}{5}$ of the remaining girls left the hall.

(a) What fraction of the girls remained in the hall in the end?

Question 54 of 54

Primary 5 Maths (Term 4) 1 pt

b) After recess, 352 girls entered the hall. Then the total number of girls in the hall was twice the total number of girls in the hall at first. How many were there in the hall at first?